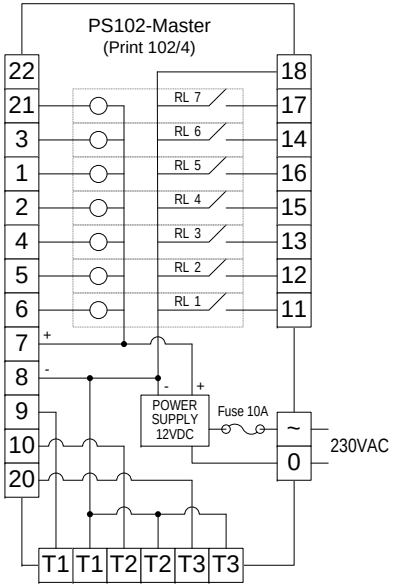

meitav-tec
Tel: 03-9626462
Fax: 03-9626620
e-mail: support@meitavtec.com

PS102/MASTER						Checked: A.Star
		2		22.01.09		Approved: E.Roy
Date: **22/01/2009**	No. 2	1	Original	09.01.08	File: ps102-master.vsd	