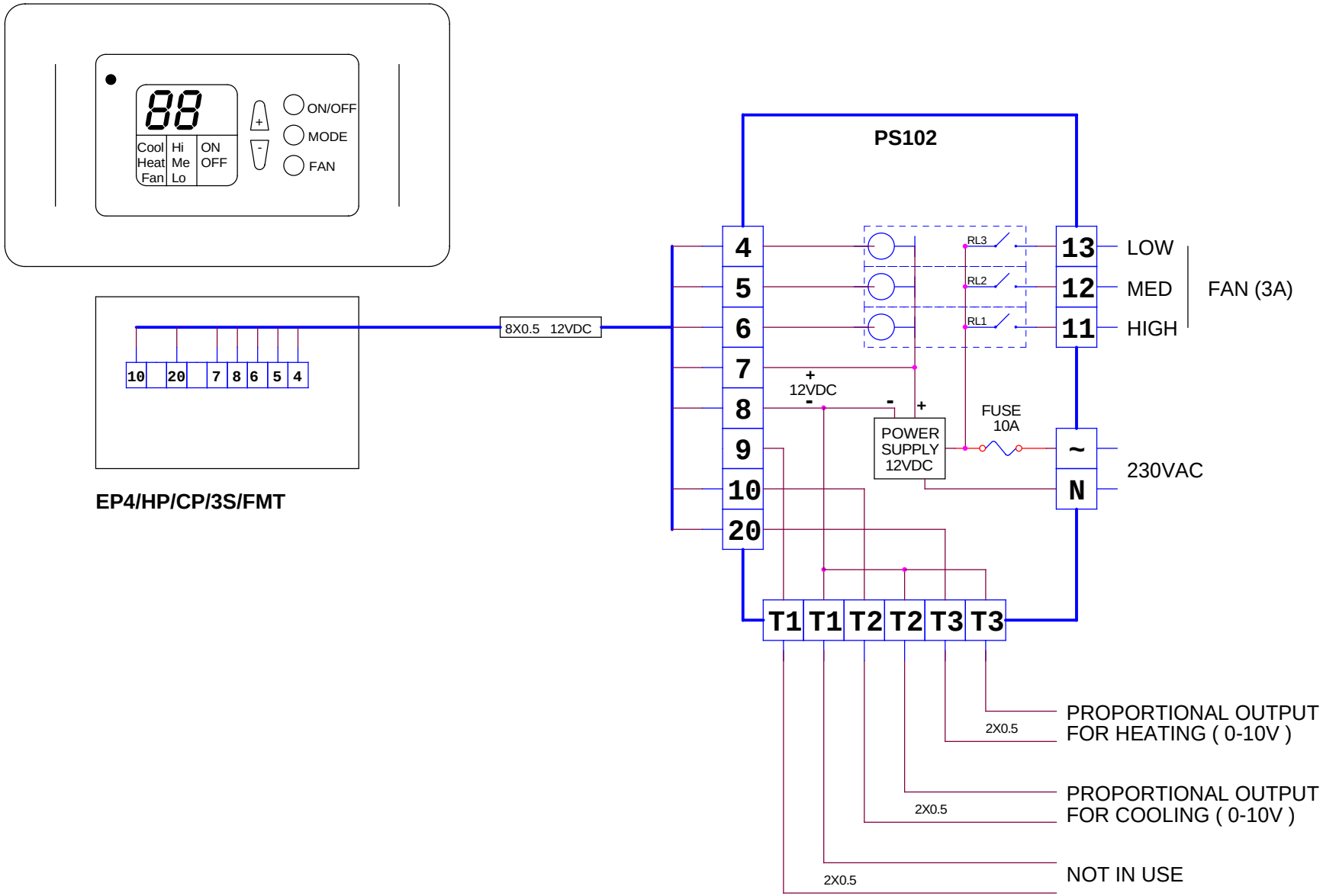

meitav-tec
Tel: 03-9626462 Fax: 03-9626620
email: support@meitavtec.com

Title:	EP4/HP/CP/3S/FMT (PS102)			Print name: ERT340P	Drawn: Marina
				Software name: ----	Checked: Oleg
				Check sum: ---	Approved: Daniel
Date: 04/03/2008	DWG No. 104042	No.	Revision	Date	File name: EP4-HP-CP-3S_FMT+PS102.DSN